Daniella by Fibre Mood

Daniella by Fibre Mood

****

0 - 26

Daniella is synonymous with class and comfort, with its slight A-line shape, turtle neck, and wrist trim in jersey. The puffed insert sleeves add an extra flourish of femininity. Daniella looks divine with a pair of thick tights, either in the same or a contrasting colour. Or the sun is out and it's still warm enough, ditch the tights altogether! You're destined to want more than just one of this fantastic dress. And you're in luck, because you can.. in just 1, 2, 3! How about making them in different lengths if it strikes your fancy? Just check it out on www.fibremood.com. It's also not hard to turn Daniella into a top. Would you prefer loose, floaty sleeves instead? Leave off the wrist trim!

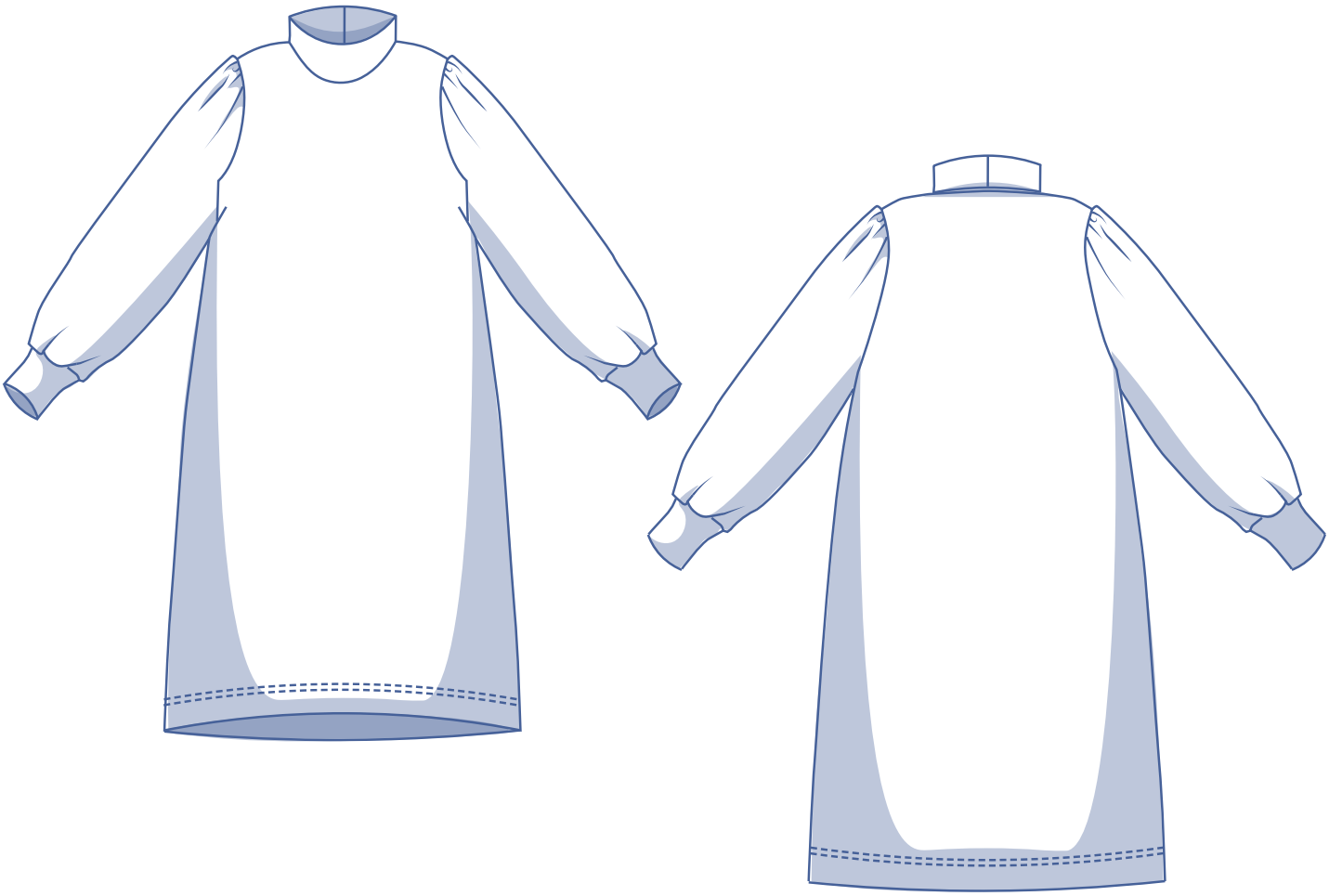

size chart (in inches)

size	0	2	4	6	8	10	12	14	16	18	20	22	24	26
body height	5'25"	5'38"	5'45"	5'48"	5'51"	5'54"	5'58"	5'61"	5'64"	5'64"	5'64"	5'64"	5'64"	5'64"
B (bust)	29.9	31.5	33.1	34.6	36.2	37.8	39.4	40.9	43.3	45.7	16	50.4	52.8	55.1
H (hips)	33.9	35.4	37	38.2	39.4	40.6	41.7	42.9	45.3	47.2	49.2	51.2	53.1	55.1

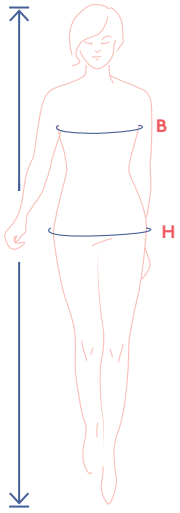

Choose your size based on your bust measurement. If your hip measurements are wider than those in the size chart, check the hip measurements in the chart below to see if there's enough room or whether the pattern needs to be altered. It's easy to do. Simply trace the line of the one size instead of the other.

pattern measurements (in inches)

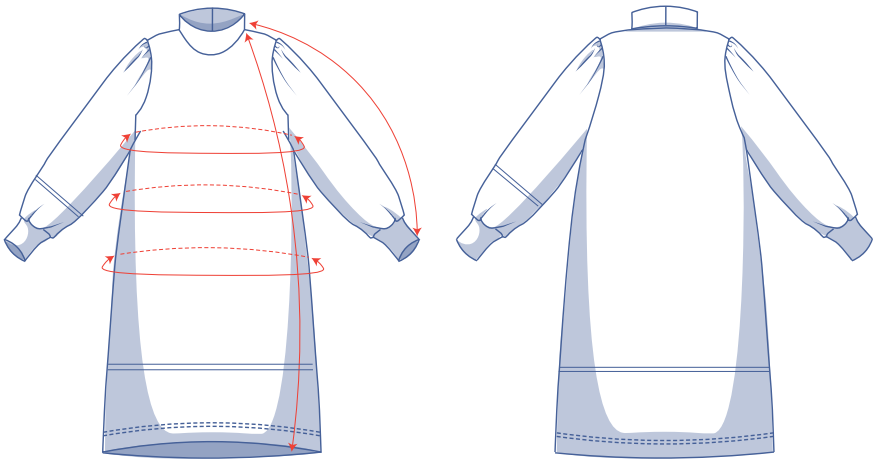

shorten or lengthen the pattern here

This chart's measurements are the pattern measurements based on the fabric type and serve as a reference. Ease has been added to the width measurements (on top of the exact body measurements) for a more comfortable fit. Daniella is designed to be fitted at the bust and looser around the hips and waist. Depending on the preferred cut, you could decide to go a size smaller or larger than the recommended size.

Please note that the pattern is intended for jersey. In order to achieve a fitted cut around the chest, the finished bust measurement is smaller than the body measurements on the sizing chart.

size	0	2	4	6	8	10	12	14	16	18	20	22	24	26
length	38.3	38.5	38.7	38.9	39.1	39.3	40.3	40.5	42.1	42.4	42.7	43	43.3	43.5
sleeve length*	26.5	26.6	26.7	26.8	27	27.1	27.2	27.3	27.5	27.6	27.8	28	28.1	28.3
bust	29	30.5	32.1	33.7	35.3	36.9	38.5	40	42.5	44.8	47.2	49.6	51.9	54.3
waistline measurement	31.4	32.6	33.8	35.3	36.9	38.5	39.3	40.9	43.1	45.3	47.5	49.7	51.9	54.1
hips	34.8	36.3	37.9	39.1	40.3	41.4	42.6	43.8	46.2	48.1	50.1	52.1	54	56

** Includindg shoulder length and wrist trim.*

Compare the stated lengths to the measured or desired lengths. Lengthen or shorten the dress and/or the sleeves by cutting the pattern pieces at the indicated double lines. Then either increase the distance between the cut pieces by the desired amount (to lengthen) or overlap the pieces (to shorten). Make sure that the CF and CB lines and the side seams are always straight.

IMPORTANT

Adjust the amount of fabric to be used based on these alterations.

supplies

- Thread
- Fabric: see table

fabric		0	2	4	6	8	10	12	14	16	18	20	22	24	26
fabric width 43"	yd	2	2	3	3 ¼	3 ¼	3 ¼	3 ¼	3 ½	3 ½	3 ½	3 ½	3 ¾	4	4
fabric width 55"	yd	2	2	2	2	2	2	2	2	2 ¼	2 ¼	3 ½	3 ½	3 ½	3 ½

The corresponding fabric layout can be found on page 6 of these sewing instructions.

fabric advice

Daniella is designed for knitted fabrics (tricot/jersey). Conveniently, there is no zip required for this pattern, as long as you doesn't get more convenient than that. That is...on the condition that you select a stretchy fabric. For example, fine knit, rib knit, French Terry, knit jacquard, and velvet are all great options.

Proud to be #Sewista

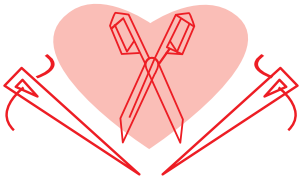

pattern pieces & seam allowances (in inches)

To sew the garment as described in the instructions, draw the illustrated seam allowances around the paper pattern pieces before cutting them out. If you are using a PDF pattern, the pattern can be printed with or without seam allowance.
To find out more, watch the video.

1. front: 1x on fabric fold
2. back: 1x on fabric fold
3. sleeve: 2x
4. wrist trim: 2x
5. neckband: 1x on fabric fold

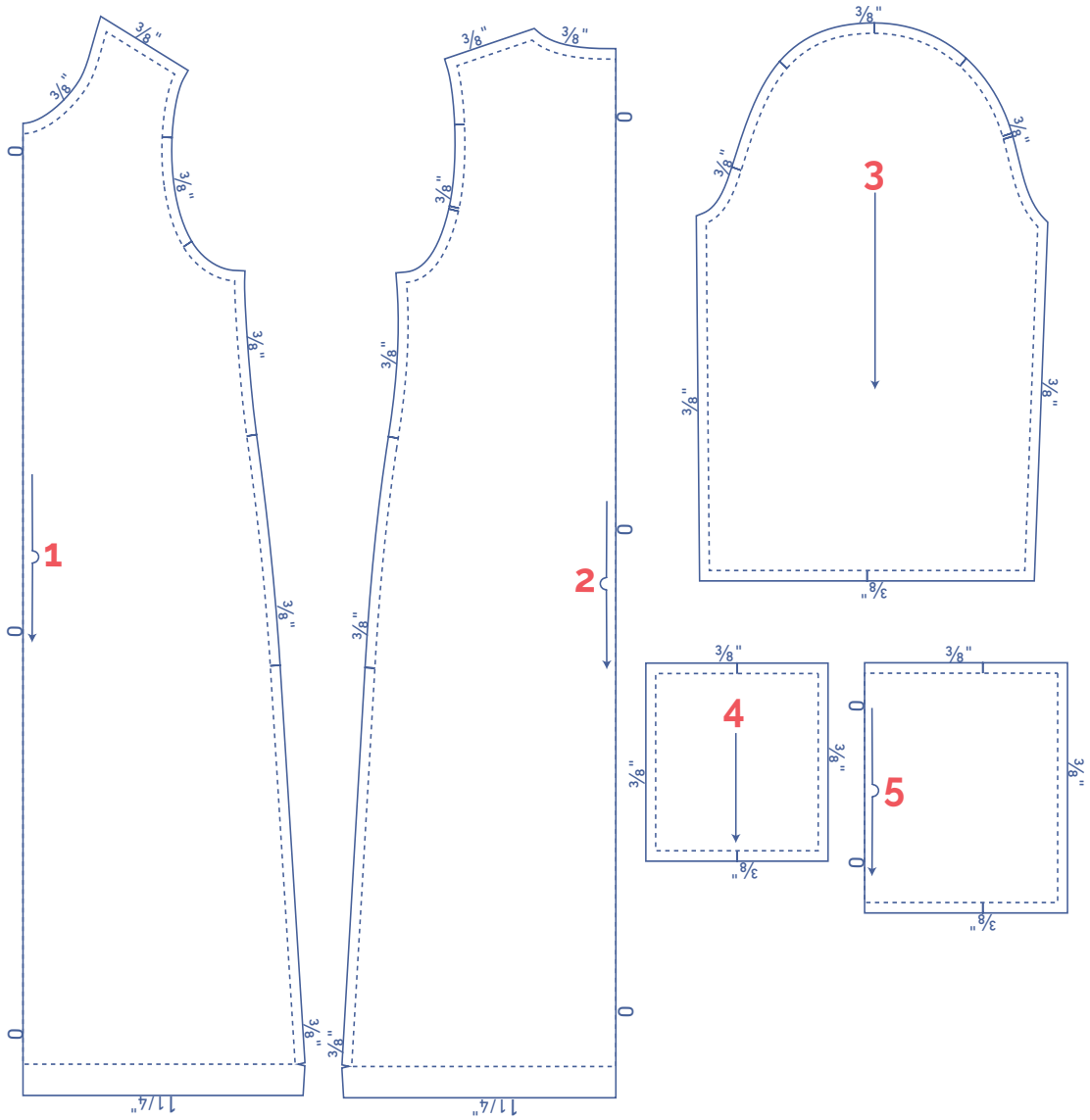

fabric layout – solid fabrics
fabric width 43"

0 - 2

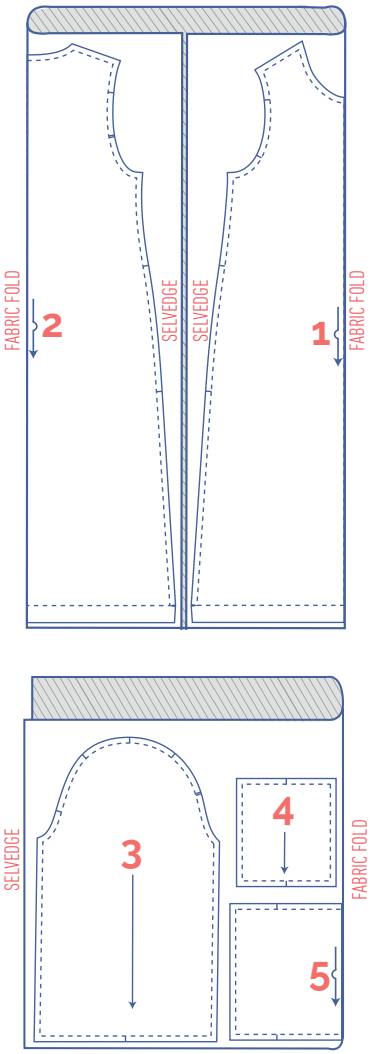

4 - 20

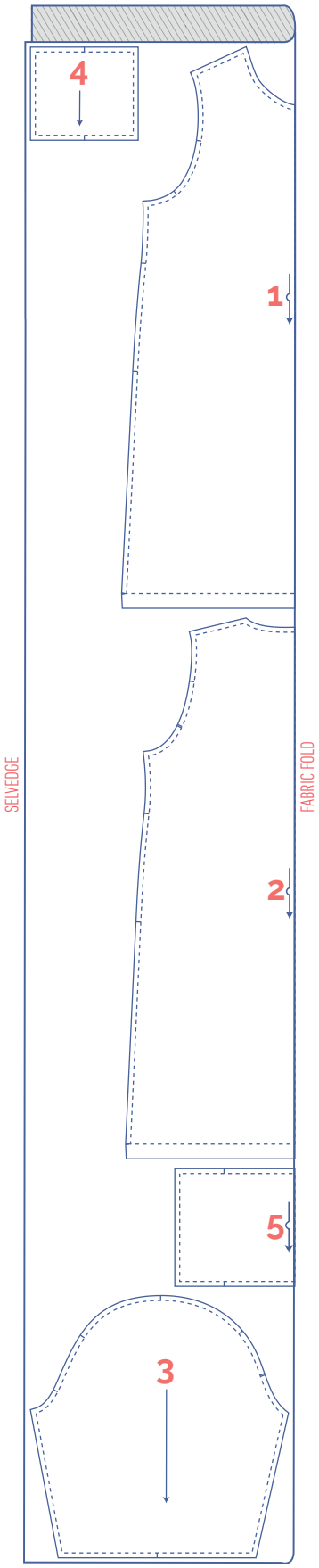

22 - 26

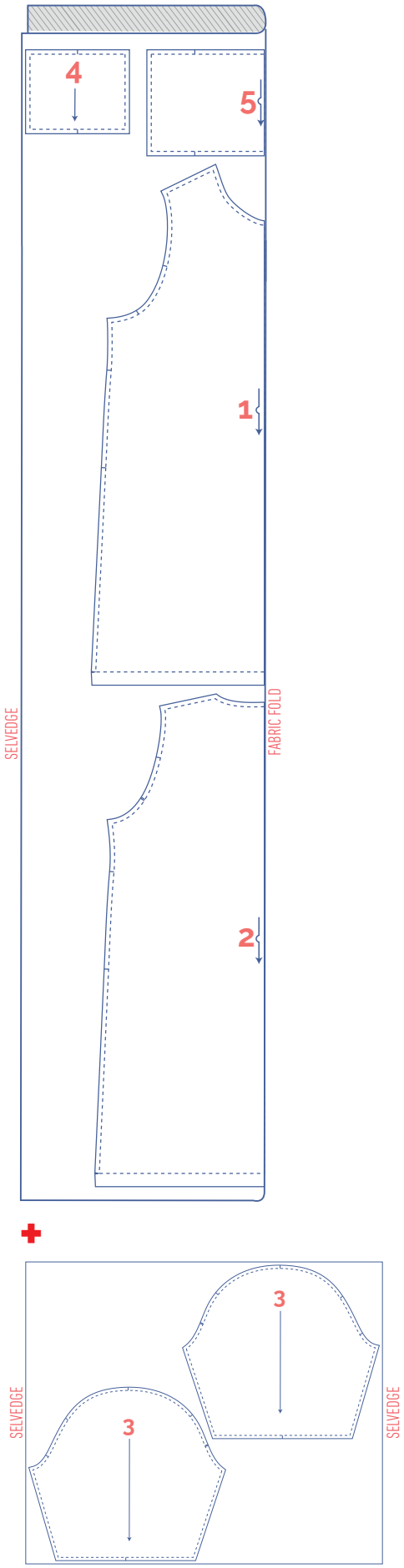

fabric layout – solid fabrics
fabric width 55"

0 - 18

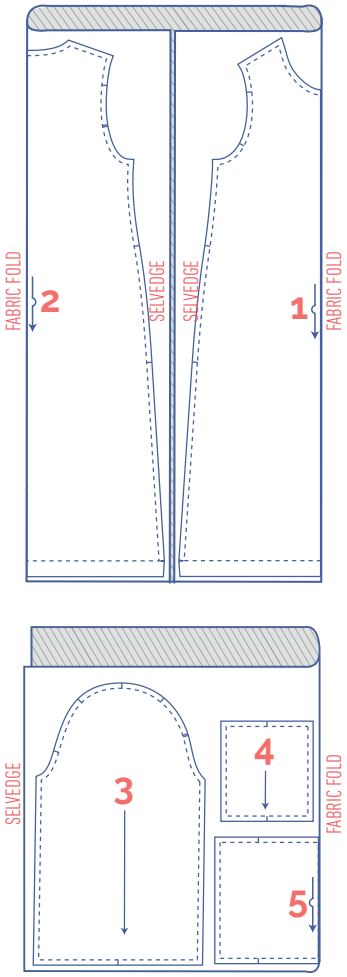

20 - 26

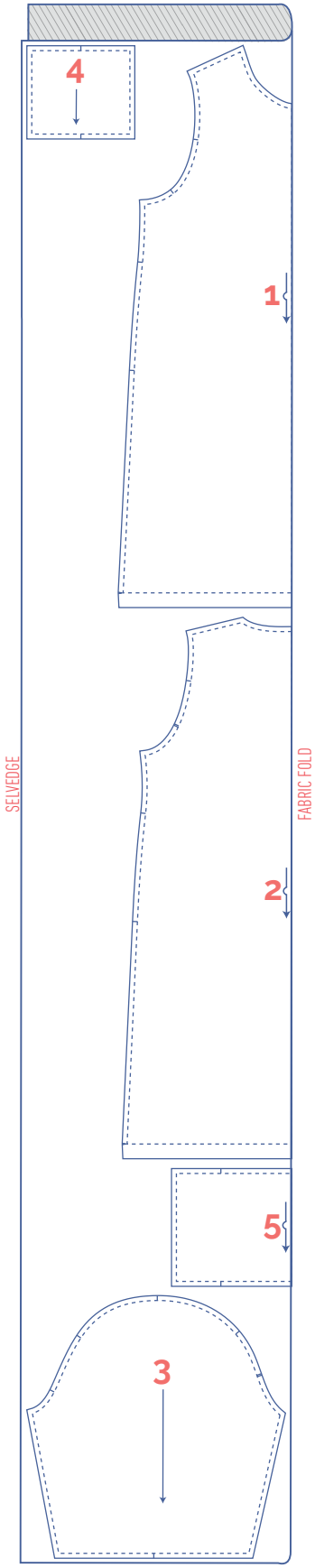

marking pattern pieces

	notch the pattern paper and fabric at the following points
|	single notch
||	double notch
V	V notch

sewing instructions

The method used to finish the seams depends on the fabric used. The pieces are always sewn together with the right sides of the fabric facing, unless stated otherwise.

F	front
B	back
CF	centre front
CB	centre back
☐	right side
▨	wrong side

NOTE

The sewing instructions explain how to make the dress if you don't have an overlocker. Use a stretch stitch setting on your sewing machine to sew the seams and an overlock stitch to finish the raw edges. The seams of the dress can also be finished with just a 4-thread overlocker, i.e. 2 upper looper threads and 2 lower looper threads. The overlocker will sew the seams and finish the raw edges together at the same time. The seams will remain elastic.

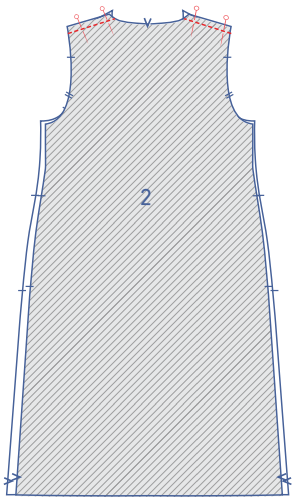

1

Pin and sew the shoulder seams of the front (1) and back (2) together.

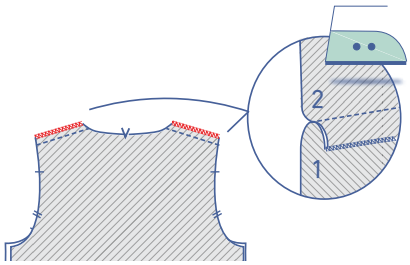

Finish the raw edges and press the seam allowance towards the front.

2

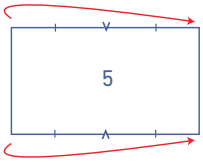

Fold the neckband (5) in half crosswise with the right sides of the fabric touching. Sew the CB seam into place with a stretch stitch. Press open the seam.

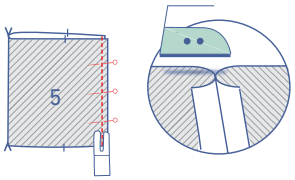

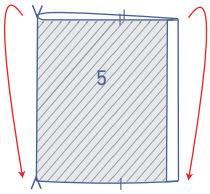

Fold the neckband in half lengthwise with the wrong sides of the fabric touching.

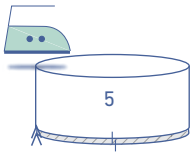

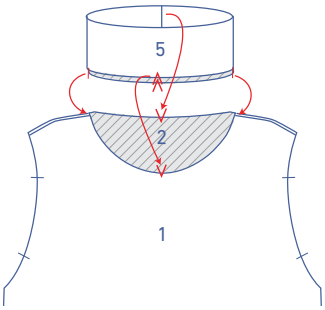

Pin both raw edges of the neckband to the right side of the neckline. The CB seam on the neckband matches the V-notch in the back; the single notches in the neckband match the shoulder seams, and the V-notch in the neckband matches the V-notch in the front.

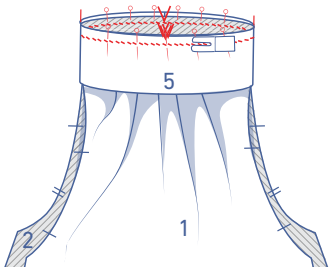

Sew into place with a stretch stitch.

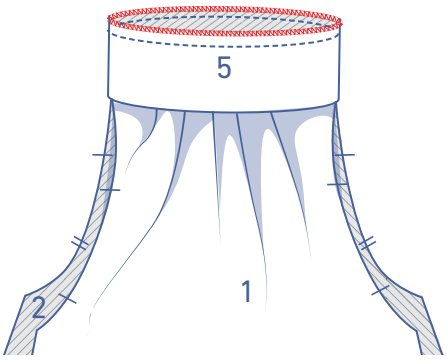

Finish the raw edges together with overlock stitching.

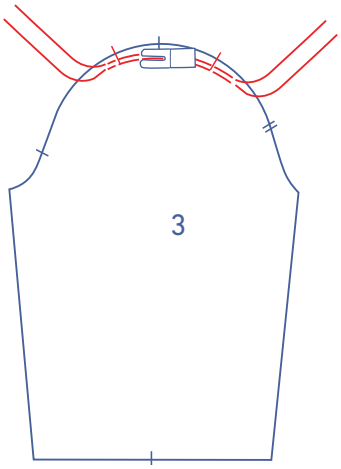

3

Sew two parallel rows of stitching at presser foot width from the top of the sleeve (3), using a long stitch length at a low thread tension. Sew just past the illustrated single notches. Leave a length of thread at the start and end of the rows.

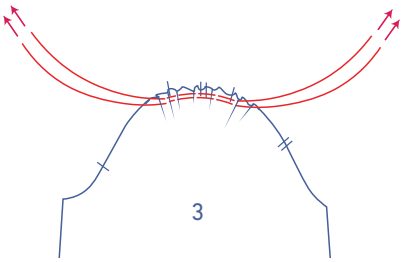

Carefully tug the ends of the threads to gather the fabric into ruffles.

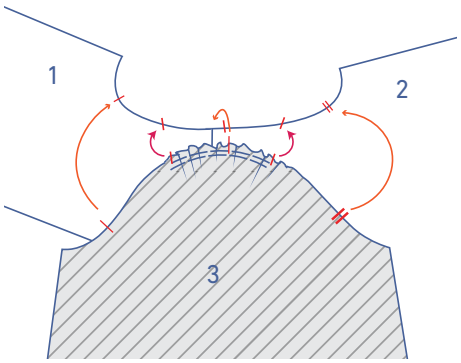

Pin and sew the top of the sleeve (= sleeve cap) to the armhole with the notches matching. The single notch marks the front, while the double notch marks the back. The single notch at the top of the sleeve cap should align with the shoulder seam. Distribute the ruffles evenly between the other single notches.

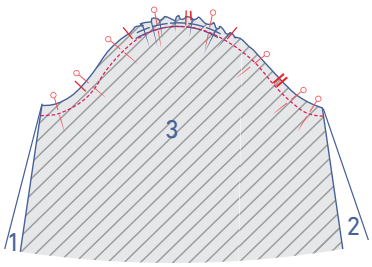

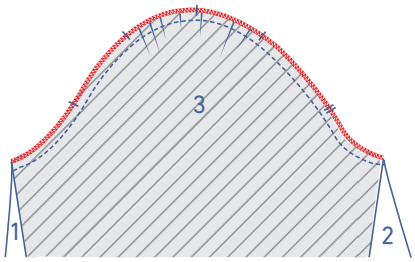

Finish the raw edges together with overlock stitching.

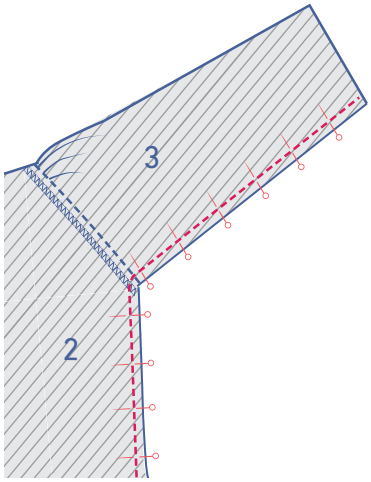

4

Pin and sew the side and underarm seams.

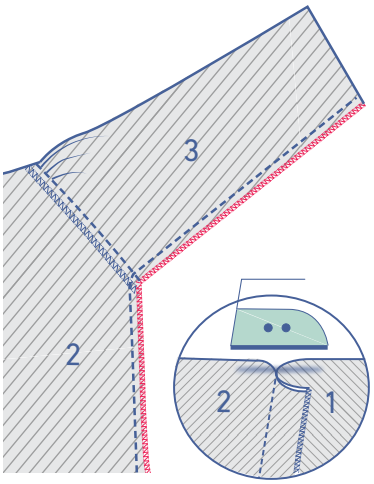

Finish the raw edges together with overlock stitching. Press the seam allowance towards the front.

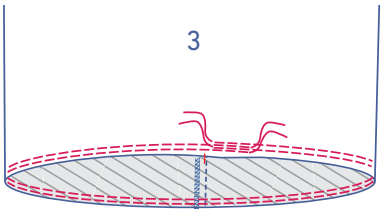

5

Stitch two parallel rows at presser foot width from the bottom of the sleeve, using a long stitch at a low thread tension. Leave a length of thread at the start and end of the rows.

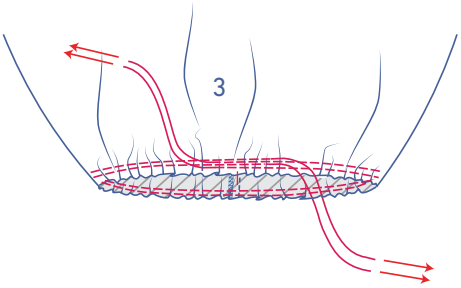

Carefully tug the ends of the threads to gather the fabric into ruffles.

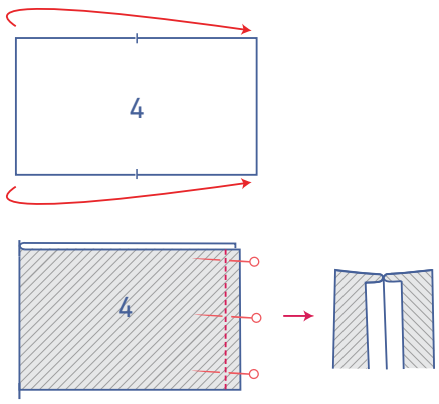

Fold the wrist trim (5) in half crosswise with the right sides of the fabric touching and stitch the short ends together with a stretch stitch. Press the seam allowance open.

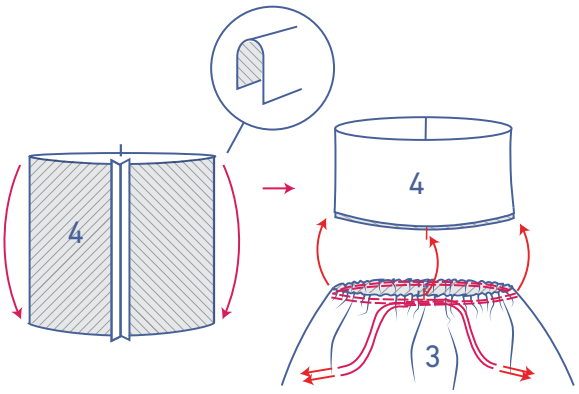

Press the wrist trim in half lengthwise with the wrong sides of the fabric facing.

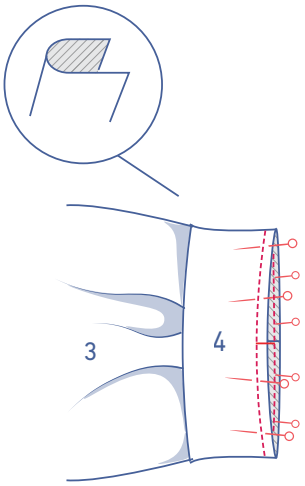

Slide the wrist trim over the bottom of the sleeve so all the raw edges are aligned. Distribute the ruffles until the seams and notches match. Pin and sew into place with a stretch stitch.

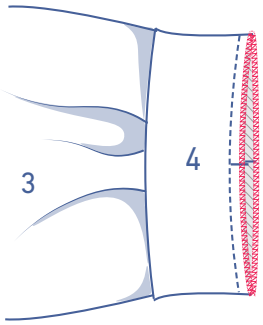

Finish the raw edges together with overlock stitching.

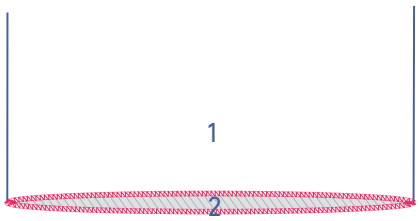

6

Finish the hem with overlock stitching.

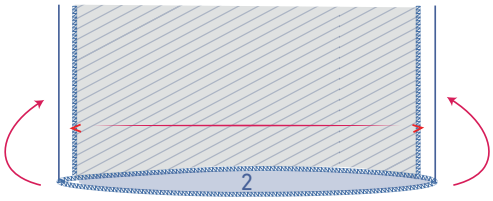
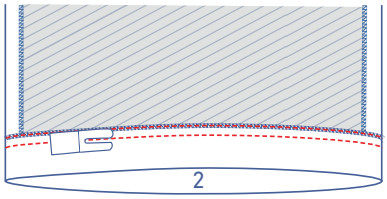
Fold the hem allowance up. Sew into place with two lines of stitching.